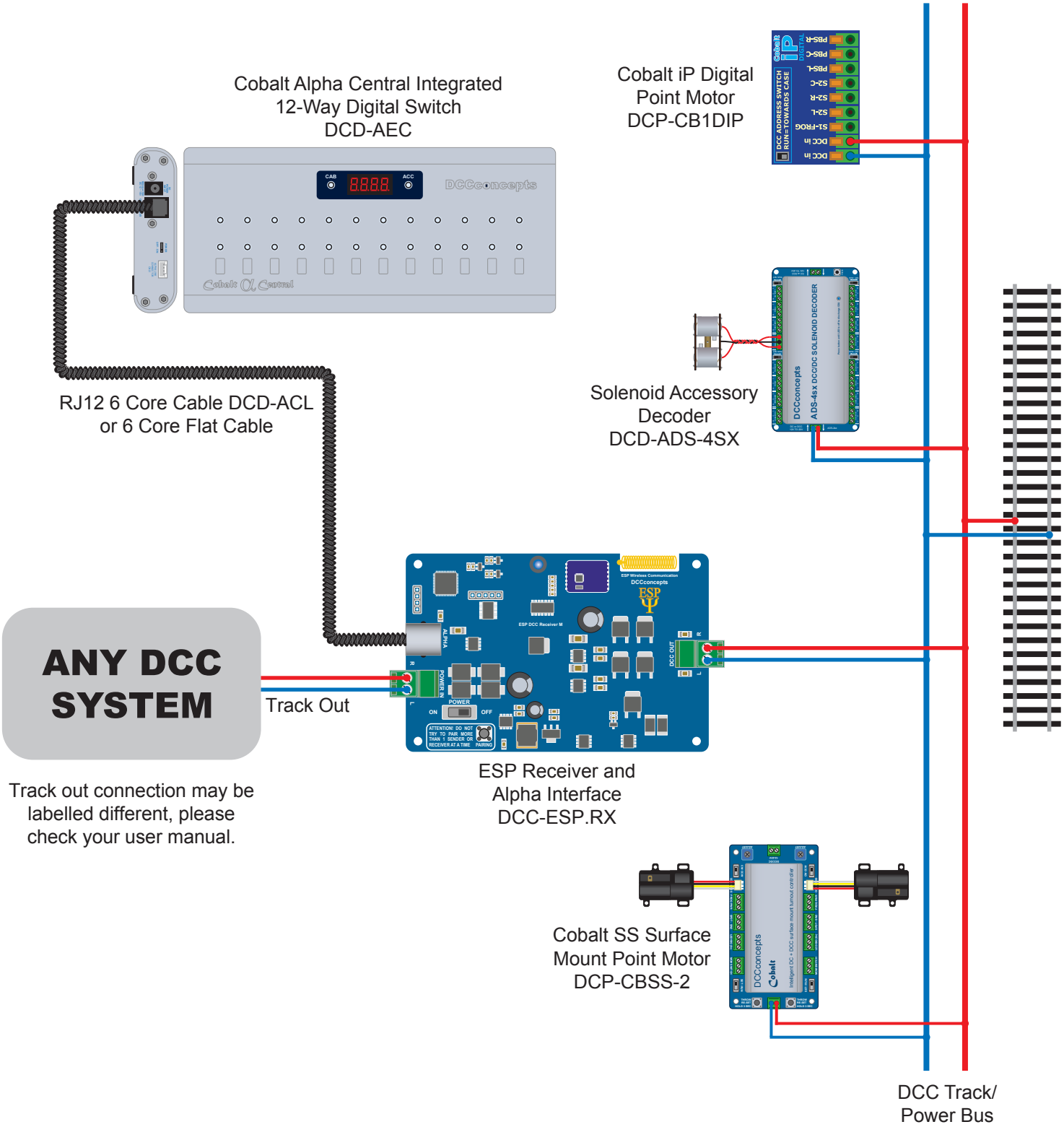ESP Receiver & Alpha Interface Linking Any DCC System With Alpha Central