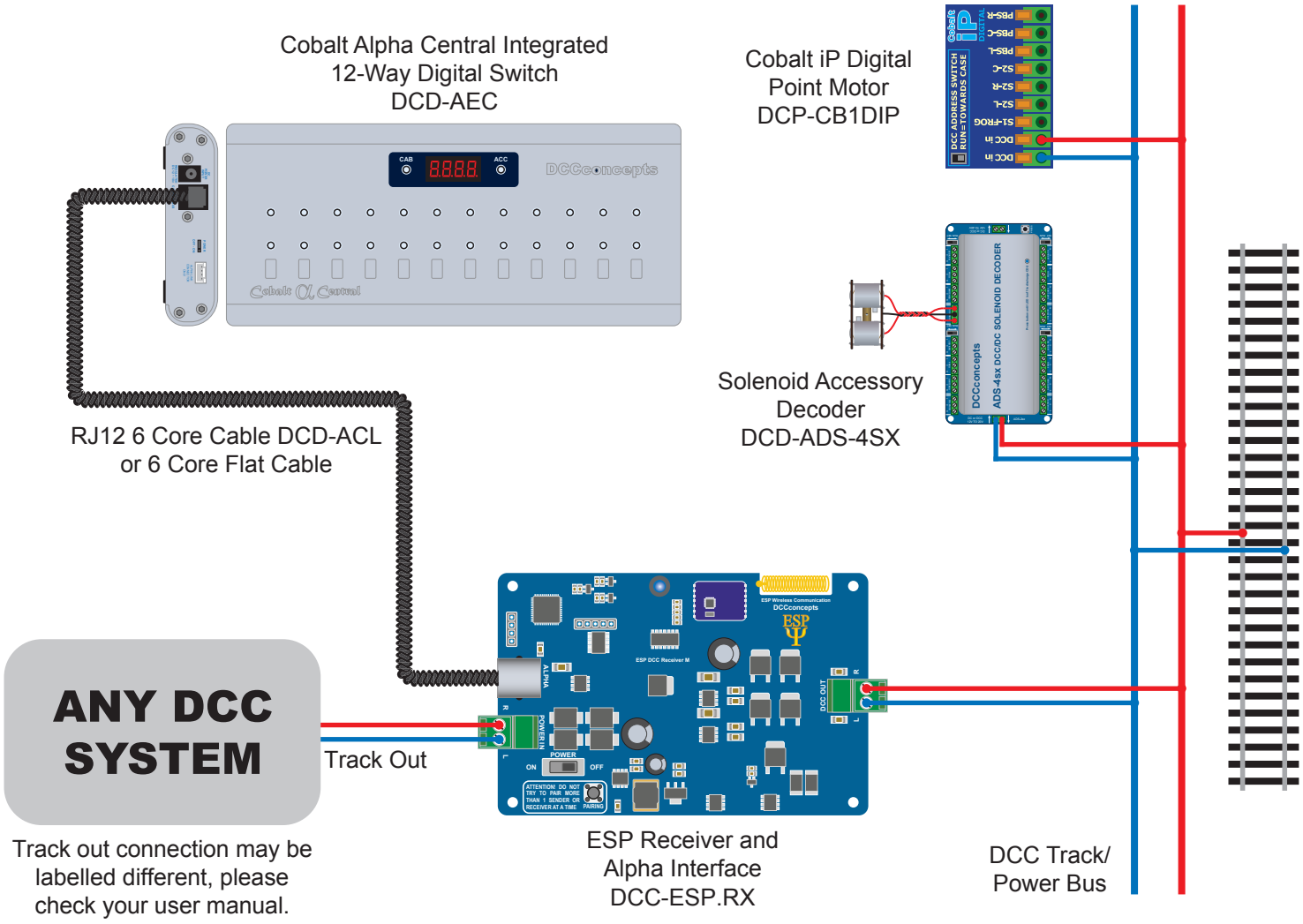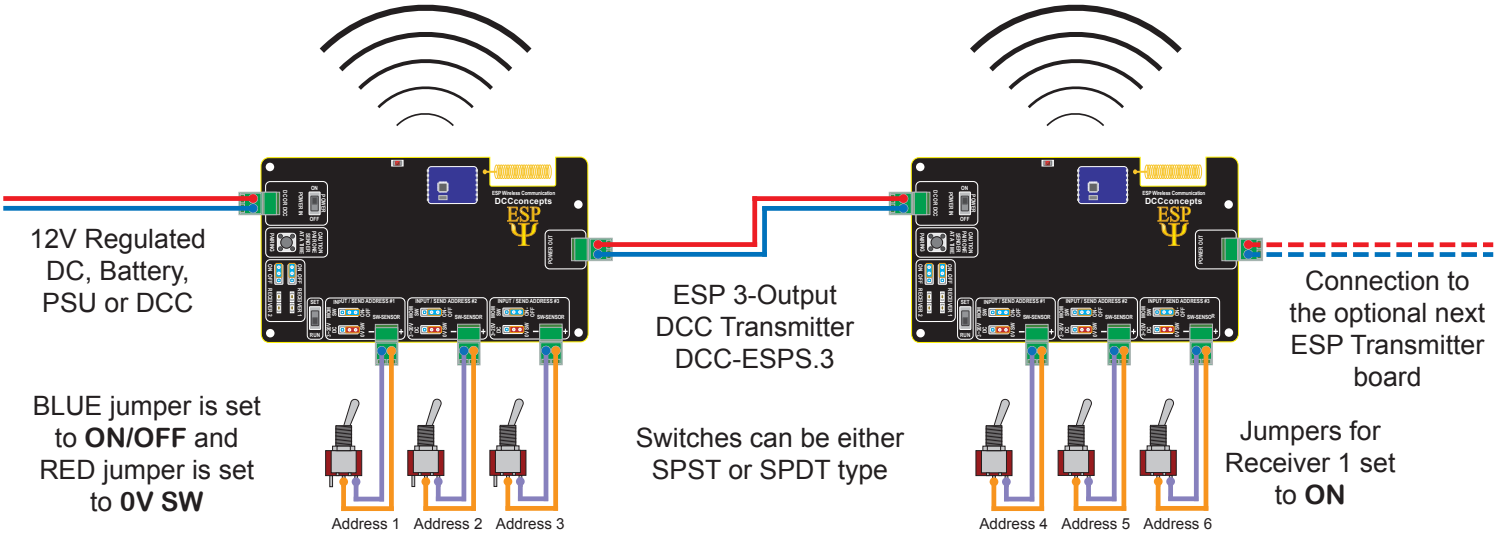ESP Receiver & Alpha Interface Linking Any DCC System With ESP TX & Alpha Central