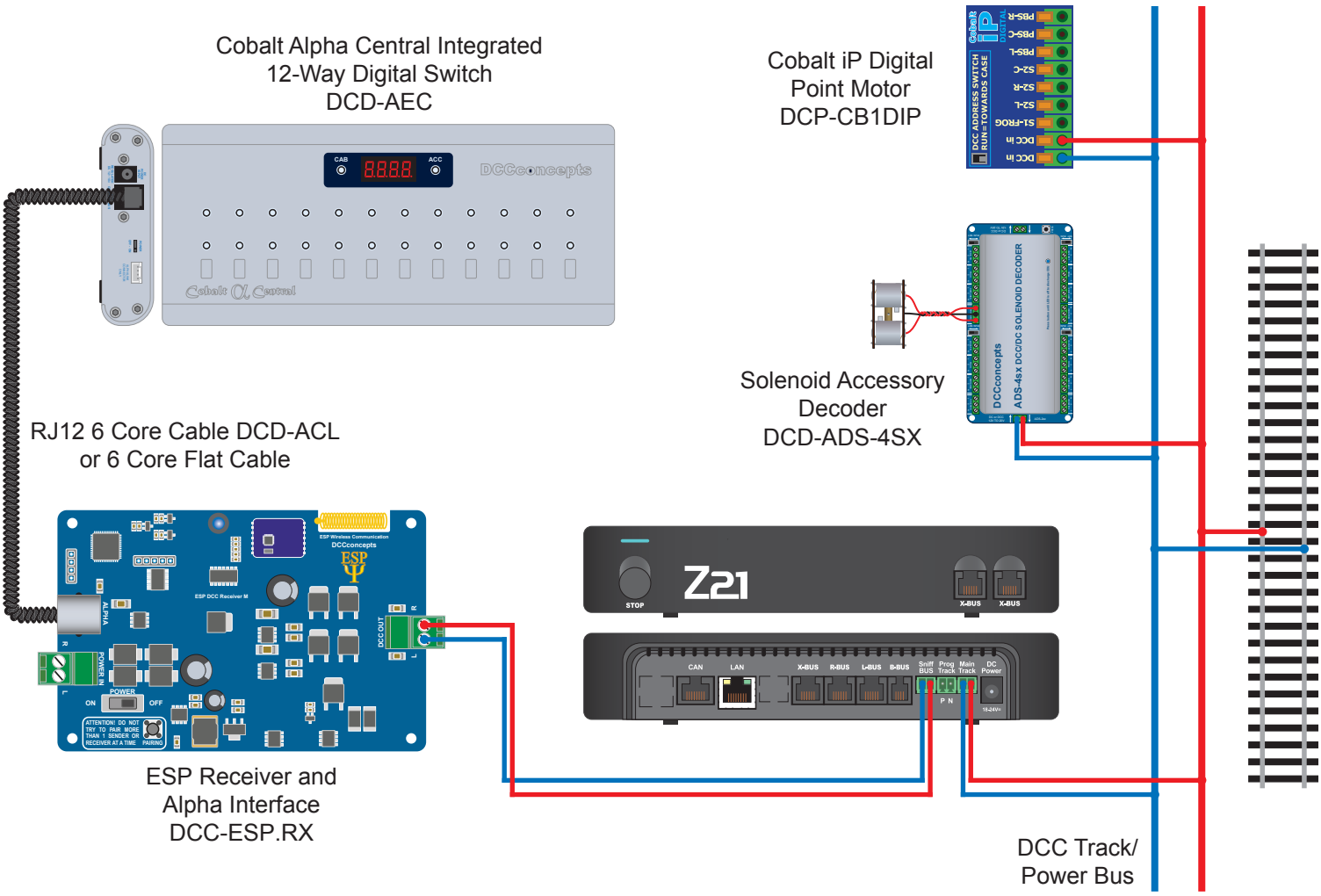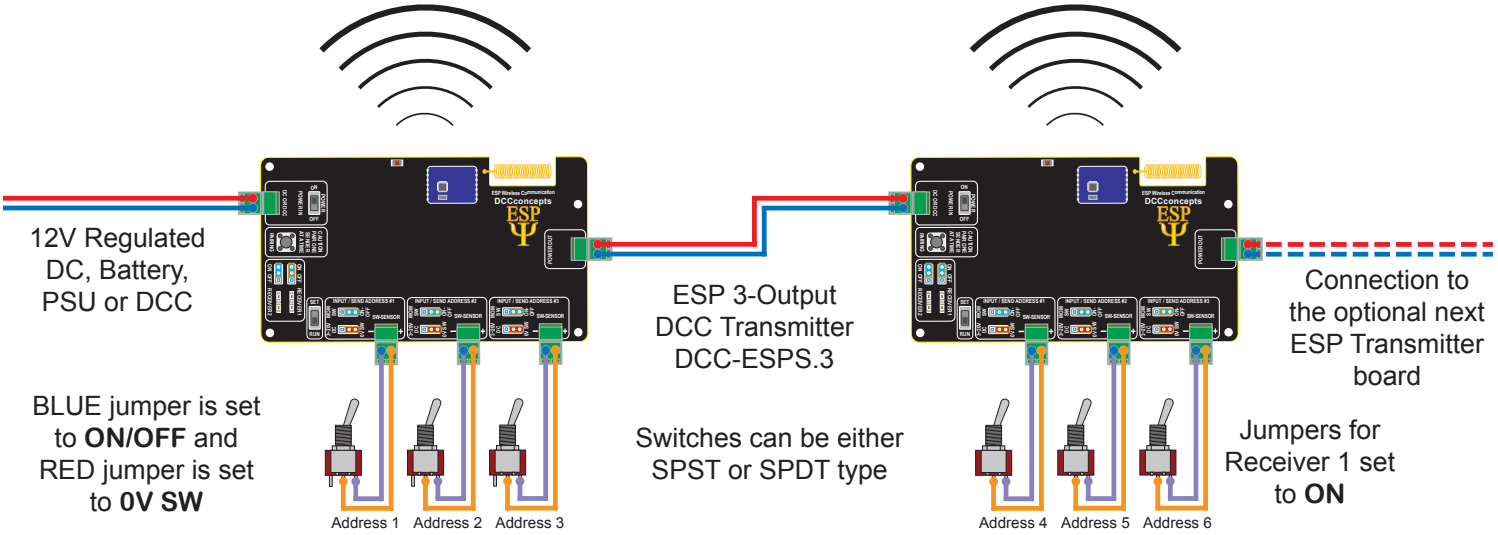ESP Receiver & Alpha Interface Linking Z21 With ESP TX And Alpha Central