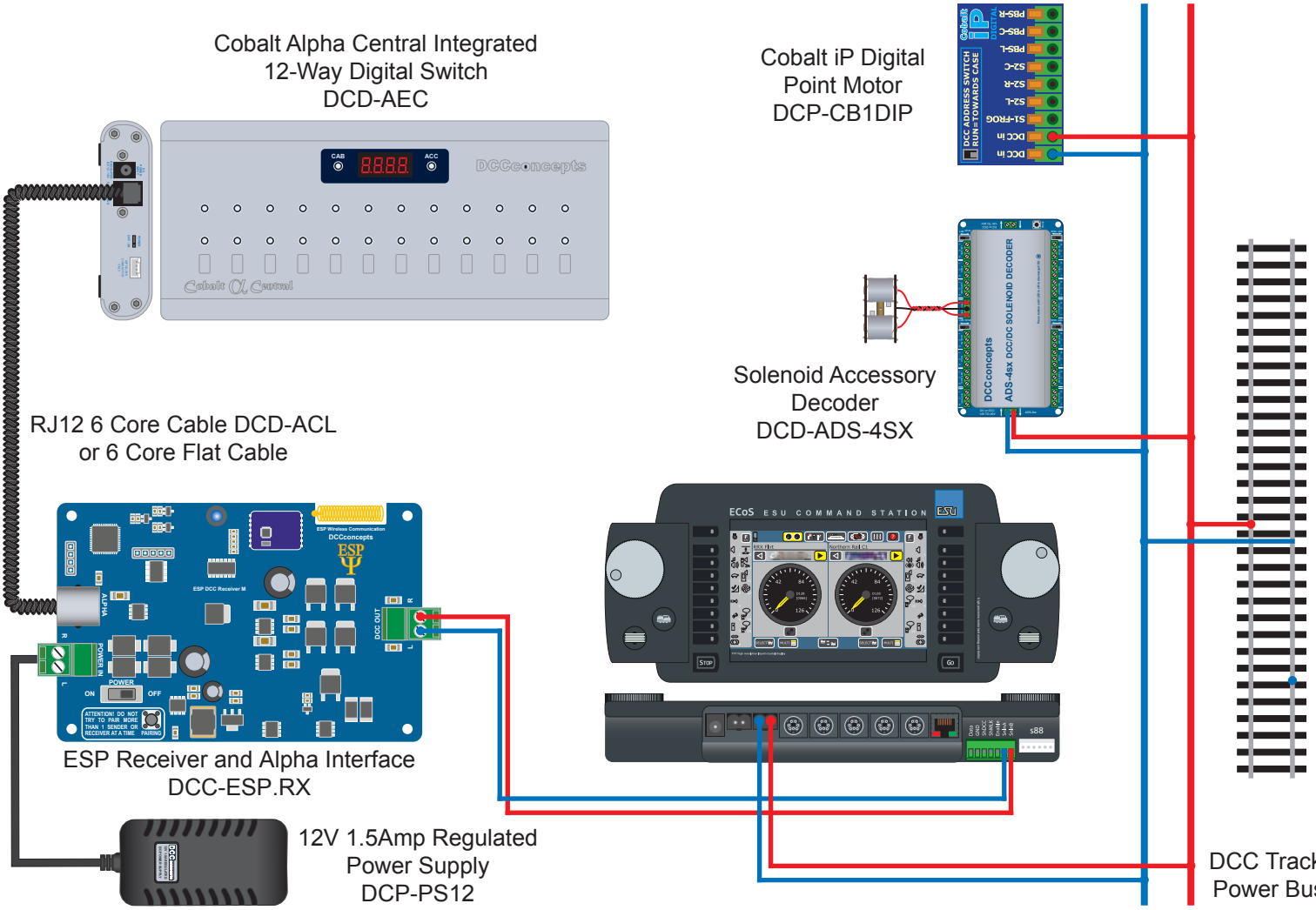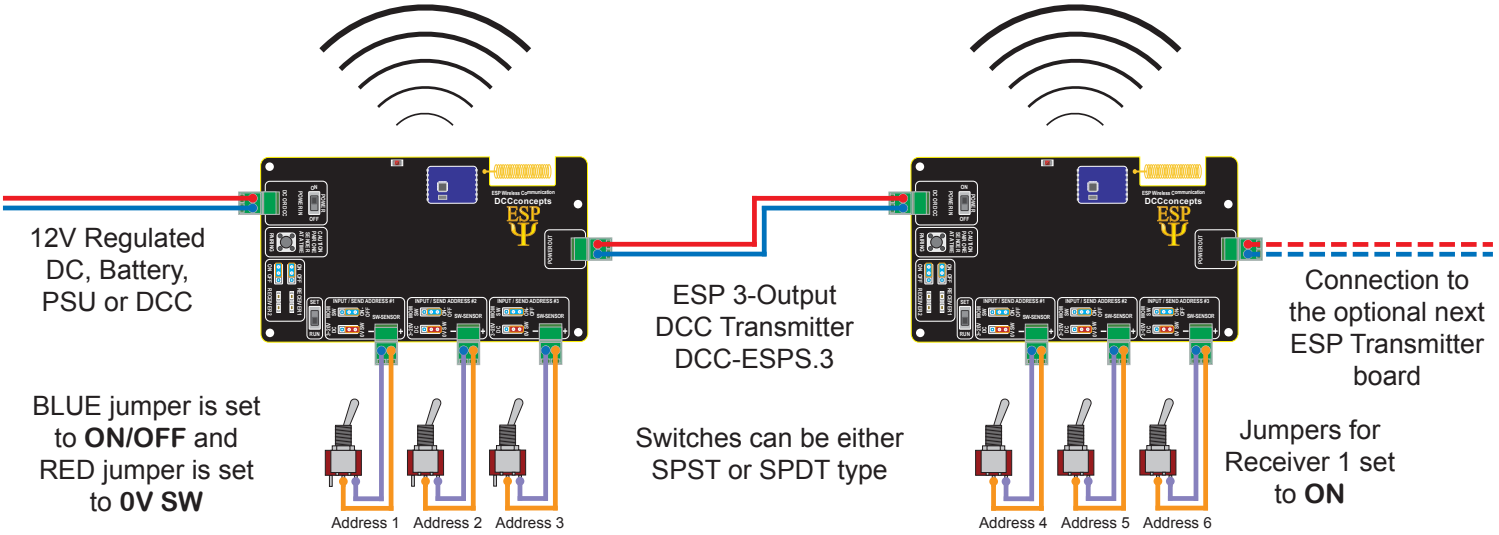ESP Receiver & Alpha Interface Linking ECoS With ESP TX And Alpha Central